240×64dots

1/64Duty Drive

Variation N, NY, NF, N-EB, N-EW, NS-EW, NY-EB, NB-EW, NF-EW, NF-SEW, N-S, NY-LY
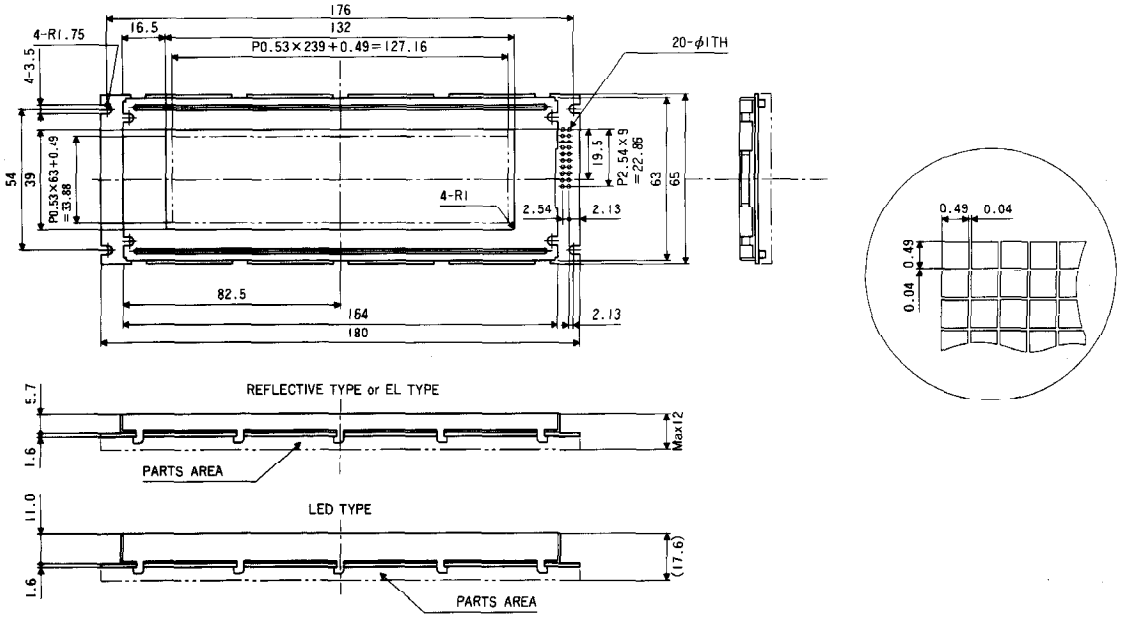
DIMENSION