240×64dots

1/64Duty Drive

Variation NYU-FW, NB-FW, NBU-FW,NF-FW
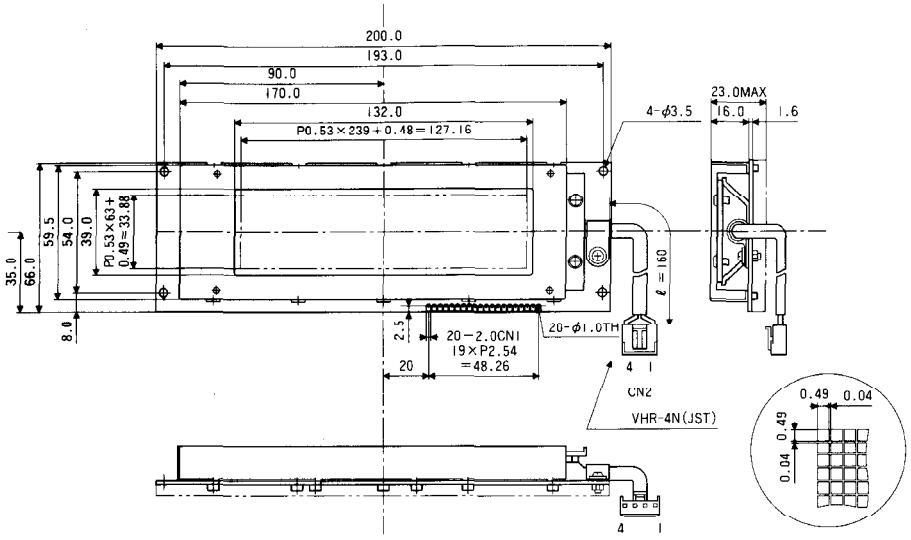
■DIMENSION